Great Little Trading Co.

gltc.co.uk

Shop & Theatre Too!

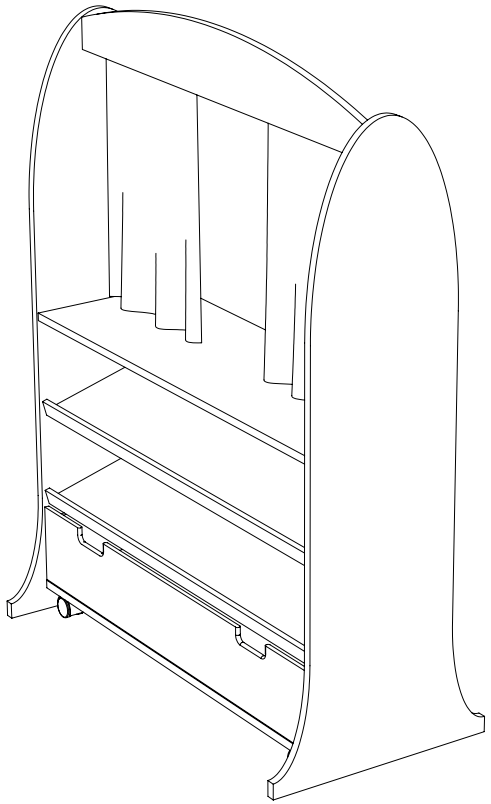

Assembly Difficulty

easy - medium - hard

two-person job

VI

27/04/2016

Thank you for shopping with GLTC, we hope you enjoy having this product in your home.

We know assembling furniture, toys or accessories is not everyone's favourite way to spend their time, so we've tried to make assembling this item as quick and painless as possible.

Hopefully our efforts will have been worthwhile and you'll sail through the whole process. But if it all feels a bit too much like hard work, then we do have an assembly company we can recommend: the Flatpack Construction Company offers a nationwide service and can be contacted on **0843 289 4951 or www.flatpackconstruction.co.uk.**

Good luck!

A few important pointers before you start:

- It might be worth checking on our website that there are no updates or revisions to these instructions (if we have had helpful feedback from other customers we pass it on via the product web page). Simply check the date and version number on the front of this leaflet against that of any site updates.
- Please read the instructions right through before you start, and check that all the components have been included in the pack; we find separating all the hardware into piles makes it easier to be sure that everything is present and correct.
- Make sure you have the right tools. Allen keys are provided if required, but screw drivers and other tools are not. You'll find details of the tools you need at the beginning of the instructions.
- It's a good idea to build the unit in the room where you are going to be using it, to avoid the need to move it after it's been assembled.
- Do not throw away any packing materials until assembly is complete, just in case you accidentally discard smaller parts or hardware.

Safety Warnings:

- Adult assembly required.
- Unassembled product contains small parts which may present a choking hazard.
- Caution, some children may require assistance from an adult when manoeuvring the product.
- To avoid possible injury from tipping, do not allow children to climb on the product or step on the draw when opened.
- Children should be kept away from the product during assembly to avoid any possible risk of injury.
- Assemble and use on a flat and level surface.
- DO NOT use power tools in the assembly of this product as there is a risk of over-tightening and consequently splitting of the wood.
- This product is heavy, so we recommend that you build it where you are planning to use it.
- Check all fixtures and fittings regularly and tighten as necessary.
- Please retain these instructions for future reference.

Customer Service:

- If you find that any components are missing or damaged, please do not begin assembly and do not use the item. Please contact GLTC Customer Services on **0344 848 6000** immediately.
- We do stock spare hardware packs at our warehouse, so we should be able to send you a replacement pack immediately if required.

Product Care:

- Wipe clean using a soft damp cloth followed by a dry cloth.
- Do NOT use cleaning products which contain ammonia, solvents or abrasive material.
- Do NOT expose the item to extremes of heat and humidity.

Could we do better?

If there is anything you think could be improved in these instructions or in the assembly of this product we'd be grateful if you could let us know; we'll pass any helpful hints and tips on to other customers via our website and update the instructions.

All you need to do is drop us a line at **instructions@gltc.co.uk**

Thank you

Component Check List

A

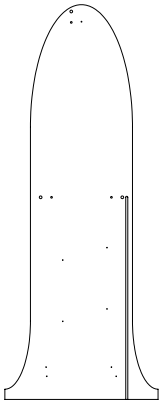

1x LH Side Panel

B

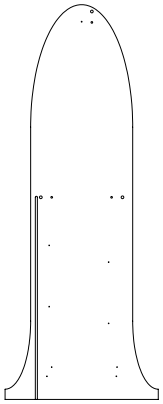

1x RH Side Panel

C

1x Top Shelf

D

2x Shelves

E

1x Top Sign

F

1x Front Base Rail

G

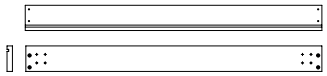

1x Rear Base Rail

H

1x Blackboard

I

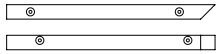

2x LH Shelf Battens

J

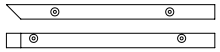

2x RH Shelf Battens

K

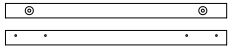

2x Base Battens

L

1x Curtain Pole

M

1x Drawer Front

N

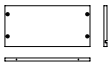

2x Drawer Sides

O

1x Drawer Back

P

1x Drawer Bottom

Component Check List

#1 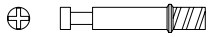 6x Cam Dowels 35mmL	#2 6x Cam Locks 14mm Diameter
#3 6x Wooden Dowels 20mmL	#4 26x Screws 13mmL
#5 16x Screws 25mmL	#6 20x Screws 30mmL
#7 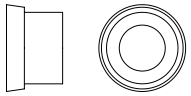 2x Pole Cradle Covers	#8 2x Pole Cradles
These come as one piece and will need separating	
#9 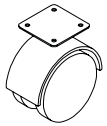 4x Castors	#10 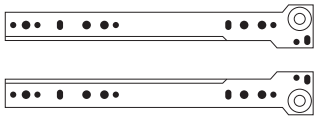 1x Pair of Runners
#11 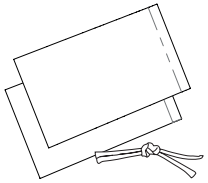 2x Curtains & Tie Backs	You will need (not supplied) 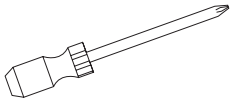 Phillips Head Screwdriver

STEP 1:

Lay the LH side panel A on a clean surface with the drill holes facing up. Insert 3x cam dowels (#1) and 3x wooden dowels (#3) to the panel as shown below.

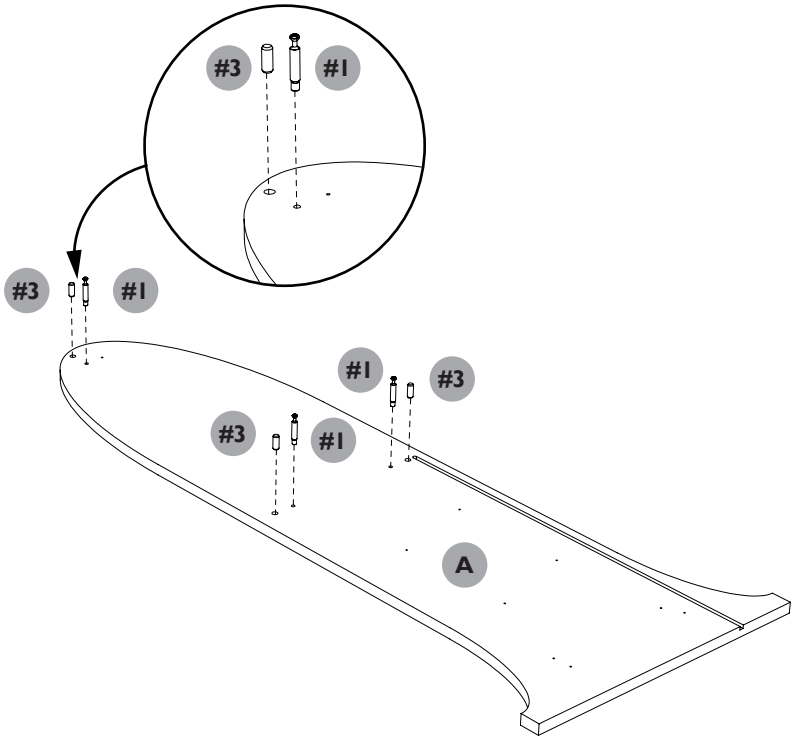

Hardware for Step 1:

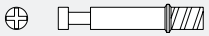

3x #1 Cam Dowels

3x #3 Wooden Dowels

STEP 2:

Screw the 2x LH shelf battens I and a single base batten K to the LH side panel A using the longest of the supplied screws (#6).

Please ensure the shelf battens I are orientated as shown below and are the correct hand (the hole spacing should be closer together on the LH shelf batten when compared to the RH).

The base batten K should align with the lowest set of pilot holes in the side panel.

The four pilot holes on batten K should face towards the bottom of the side panel.

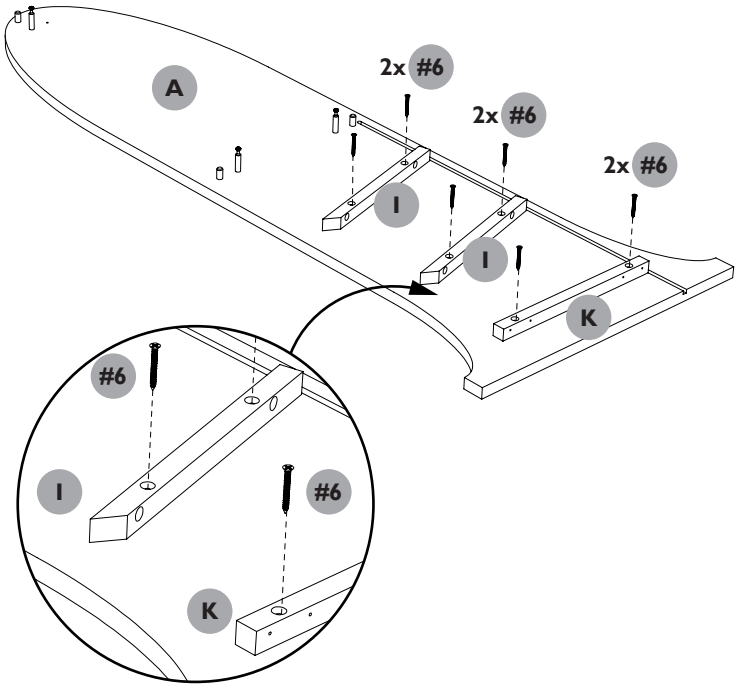

Hardware for Step 2:

6x #6 30mmL Screws

STEP 3:

Fit the runners and curtain pole cradle to the LH panel A using the shortest screws (#4).

The runner should have the nylon roller to the front as shown below (please see the bottom diagram for installing the runner).

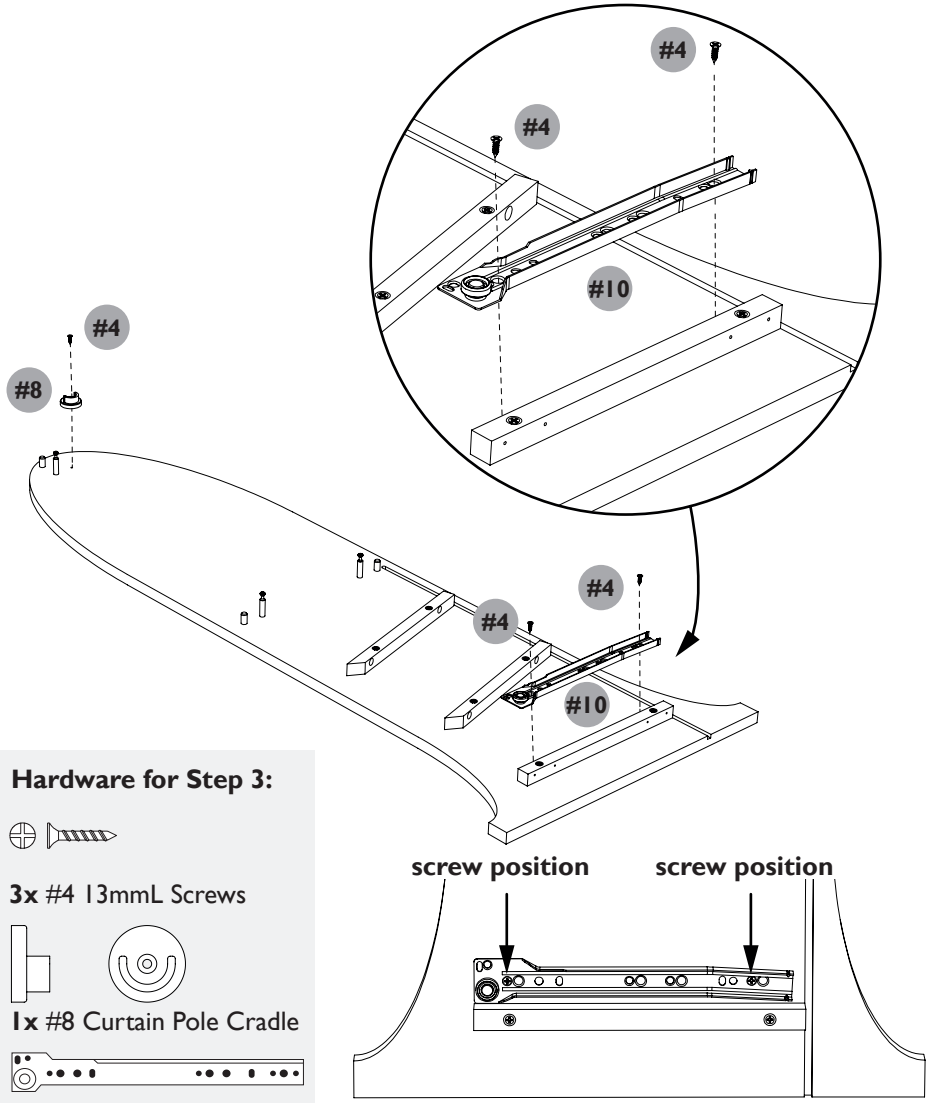

Hardware for Step 3:

3x #4 13mmL Screws

1x #8 Curtain Pole Cradle

1x #10 Runner Side

STEP 4:

Repeat steps 1 - 3 for the RH side panel B using 2x battens J and 1x batten K.

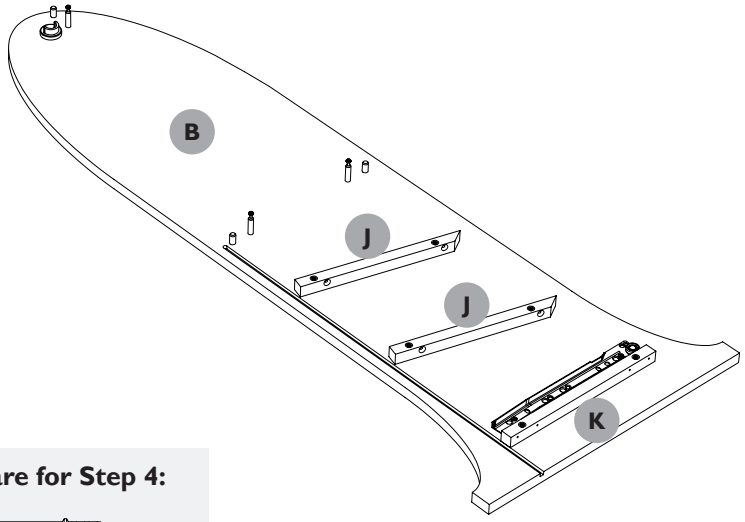

Hardware for Step 4:

3x #1 Cam Dowels

3x #3 Wooden Dowels

6x #6 30mmL Screws

3x #4 13mmL Screws

1x #8 Curtain Pole Cradle

1x #10 Runner Side

STEP 5:

With the LH side panel A on a clean flat surface, then with the assistance of a second person locate the top shelf and top sign panels on to the cam dowels. Insert 3x cam locks (#2) with the cam lock arrows facing downwards and tighten with a screwdriver.

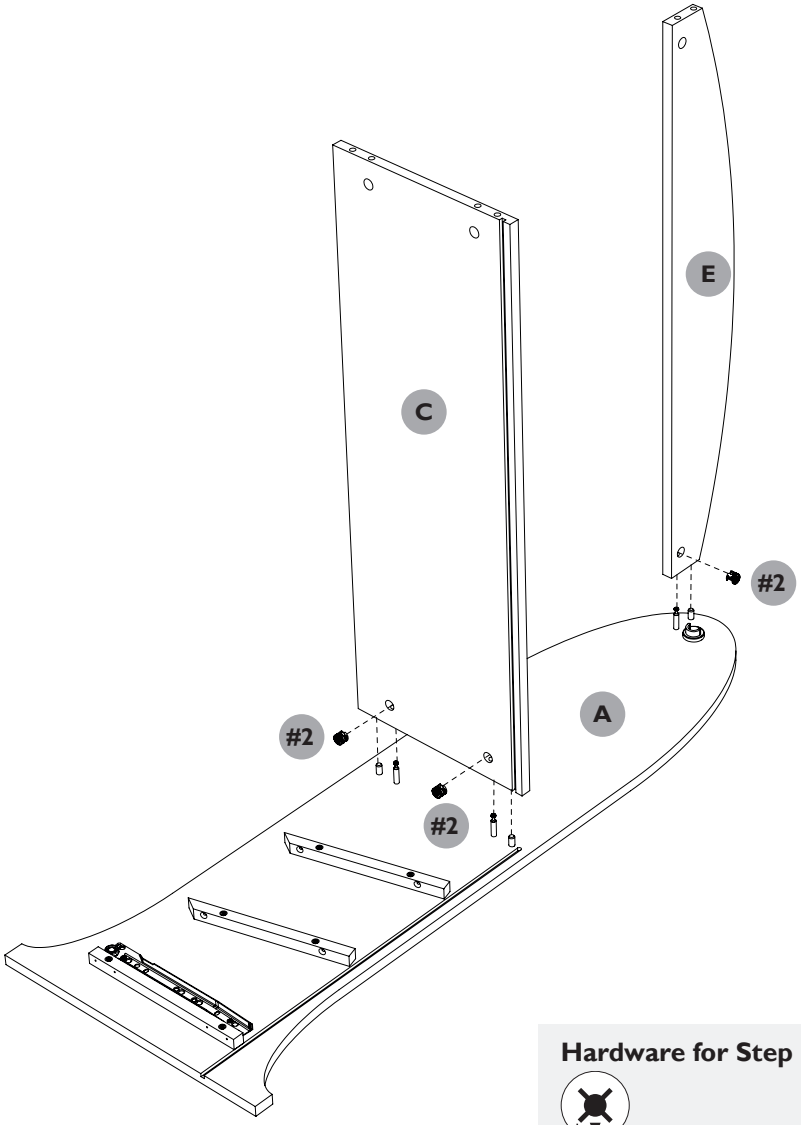

Hardware for Step 5:

3x #2 Cam Locks

STEP 6:

Locate the RH side panel B onto the top shelf and top sign. Insert 3x cam locks (#2) with the cam lock arrows facing upwards and tighten with a screwdriver. Tighten the single top cam lock first and then the two in the top shelf.

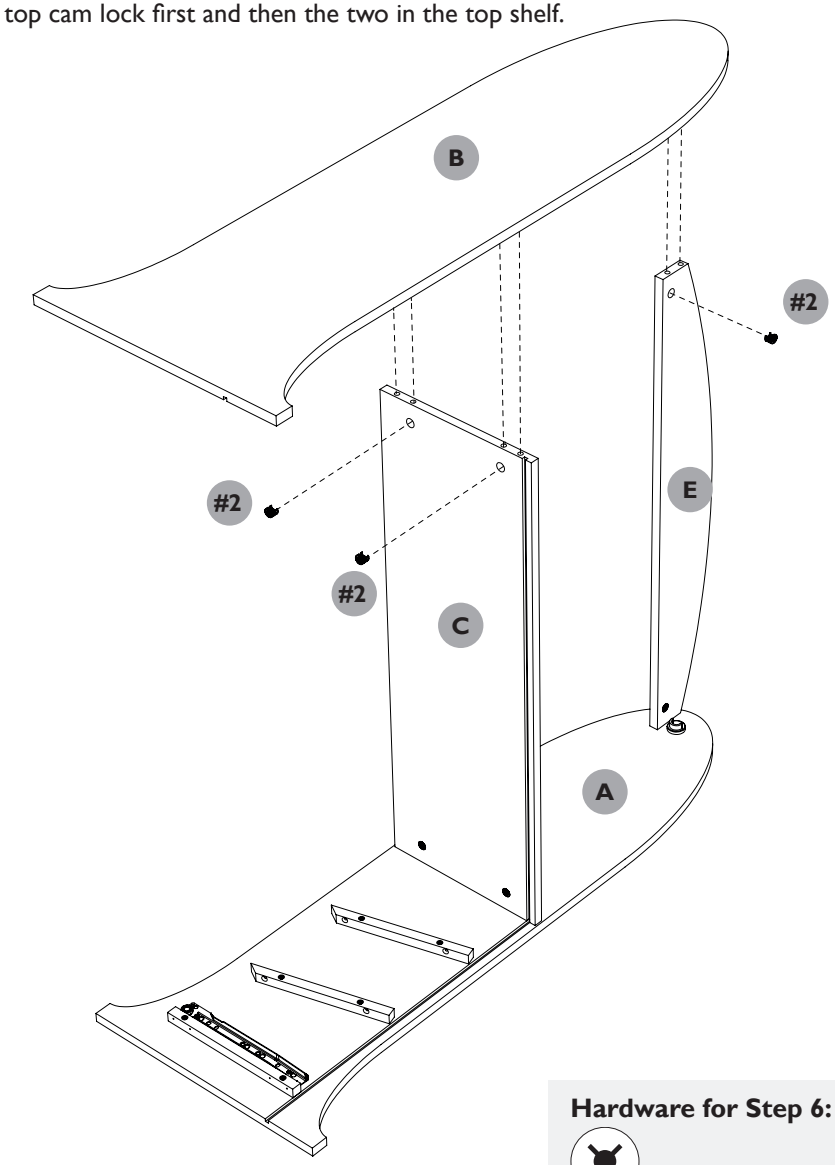

Hardware for Step 6:

3x #2 Cam Locks

STEP 7:

With the assistance of a second person, reorientate the carcase so that both side panels are in contact with the floor and the back panel slot is upwards facing you.

Now locate the first shelf onto the top pair of shelf battens I and J ensuring the shelf lip is facing the floor, and screw into place using the middle size screws (#5).

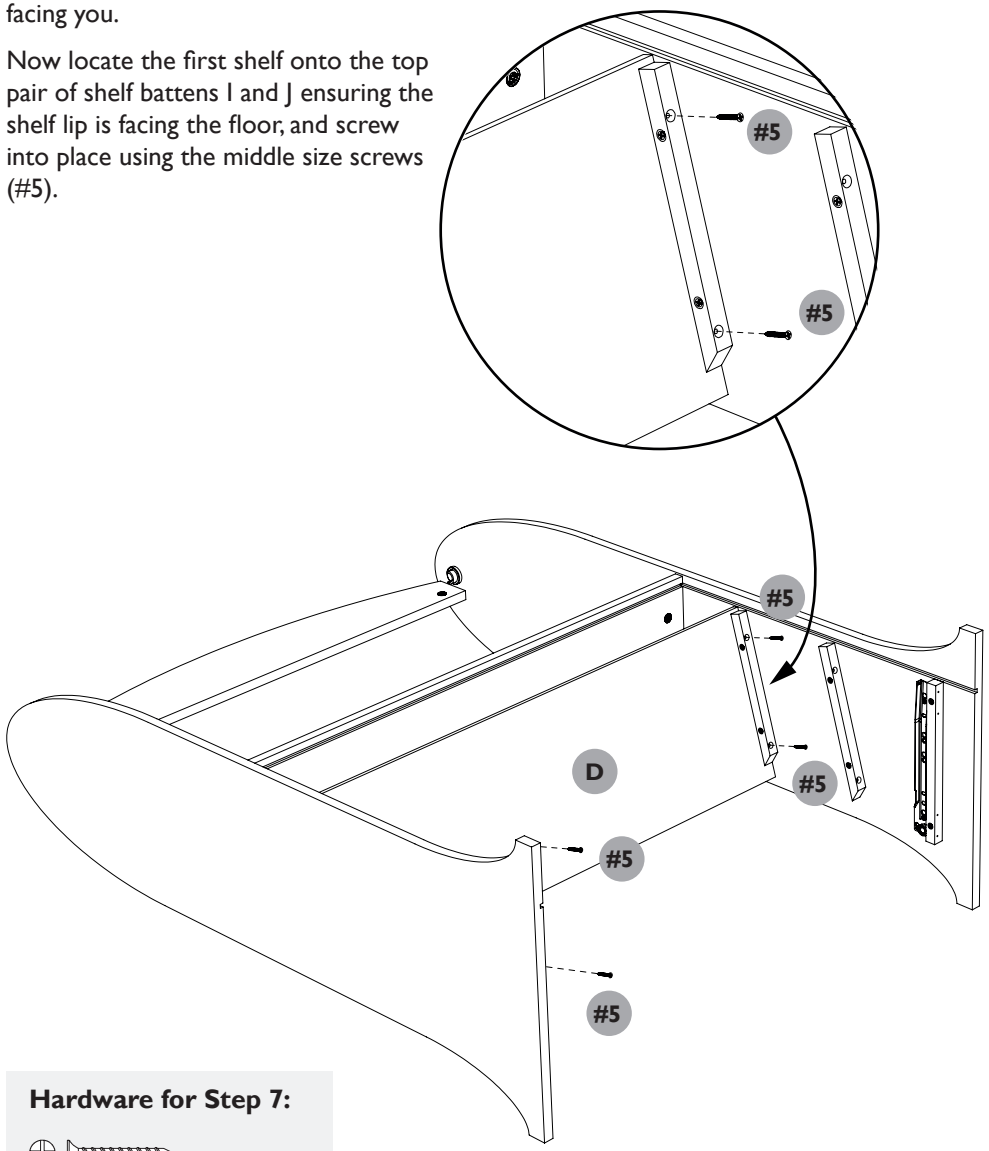

Hardware for Step 7:

4x #5 25mmL Screws

STEP 8:

Repeat step 7 for the second shelf.

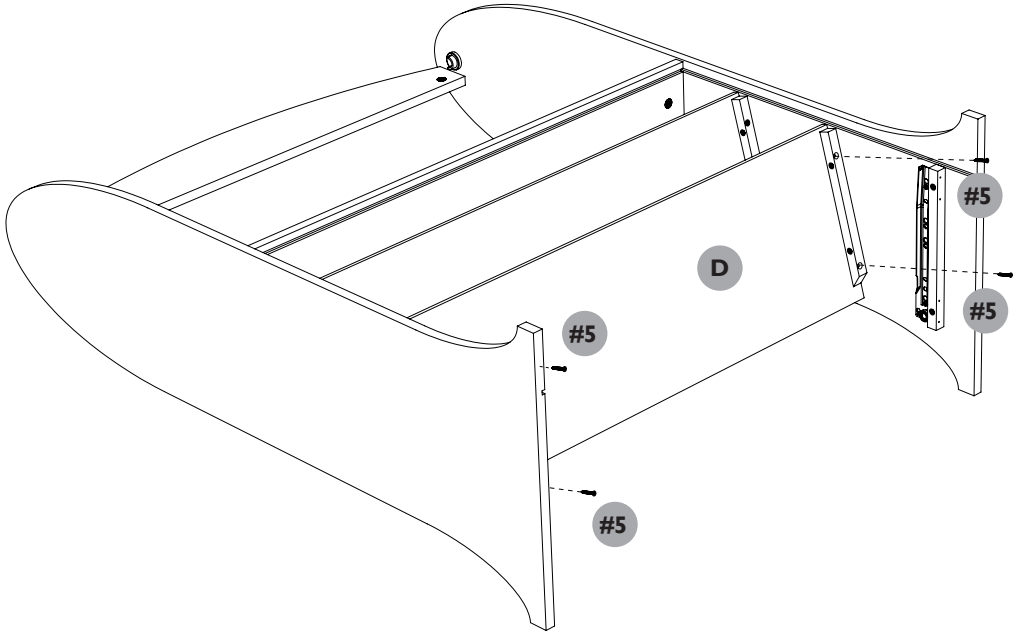

Hardware for Step 8:

4x #5 25mmL Screws

STEP 9:

Attach the 4x castors (#9) to the front and rear base rails F and G using the 4x of the shortest 13mm screws (#4) per castor.

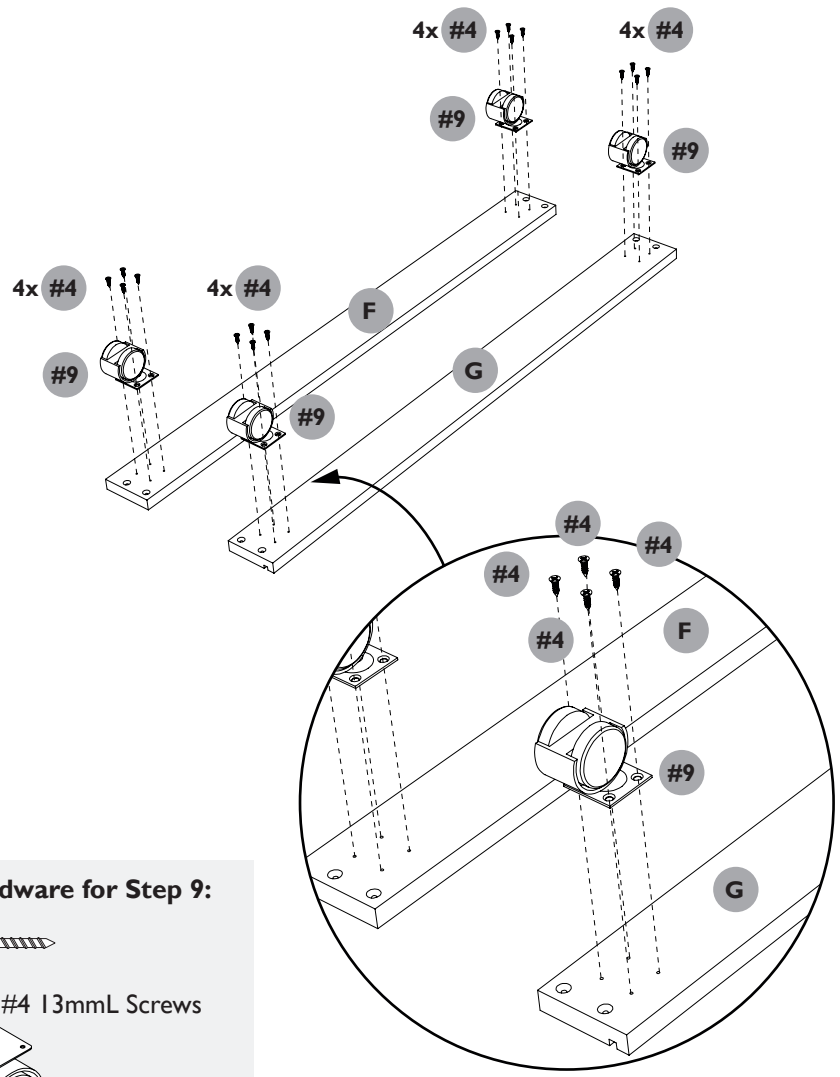

Hardware for Step 9:

16x #4 13mmL Screws

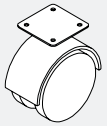

4x #9 Castors

STEP 10:

Slide the blackboard H into the grooves on both side panels and the top shelf.

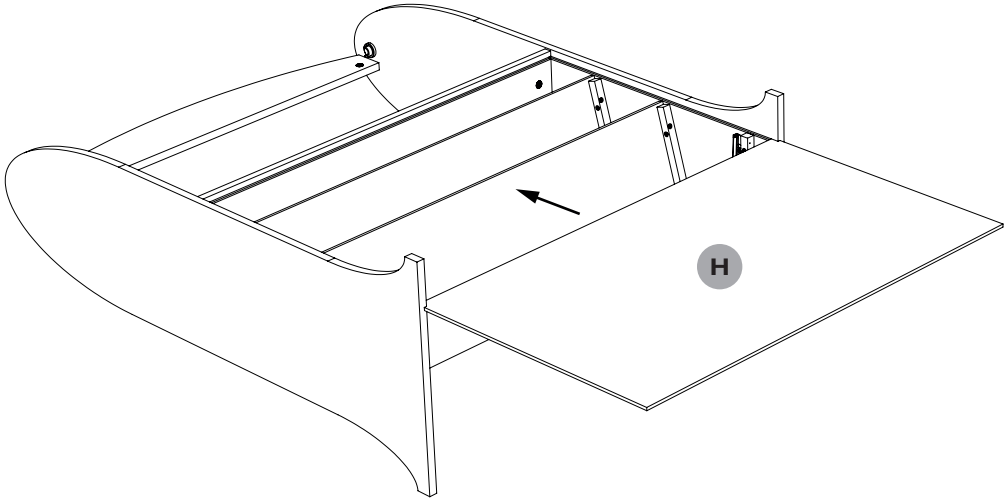

STEP 11:

Locate the rear base rail G into place ensuring the back panel locates into the slot and fix with 4x longest screws (#6). Repeat this with the front base rail F ensuring the panel has the larger overhang to the bottom.

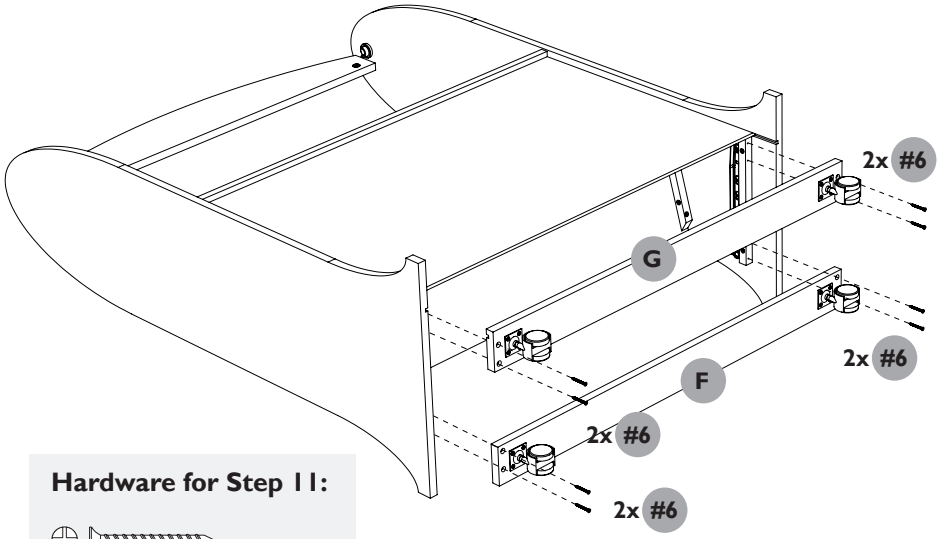

Hardware for Step 11:

8x #6 30mmL Screws

STEP 12:

Take the two drawer sides N and align the grooves with the drawer back O and screw together using 4x medium screws (#5).

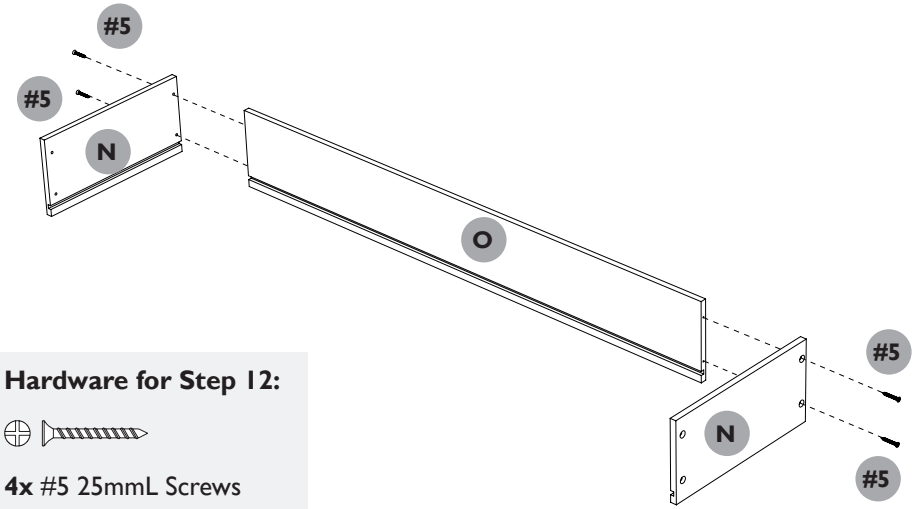

Hardware for Step 12:

4x #5 25mmL Screws

STEP 13:

Slide the drawer bottom P into the slots in the side panels N and the drawer back O.

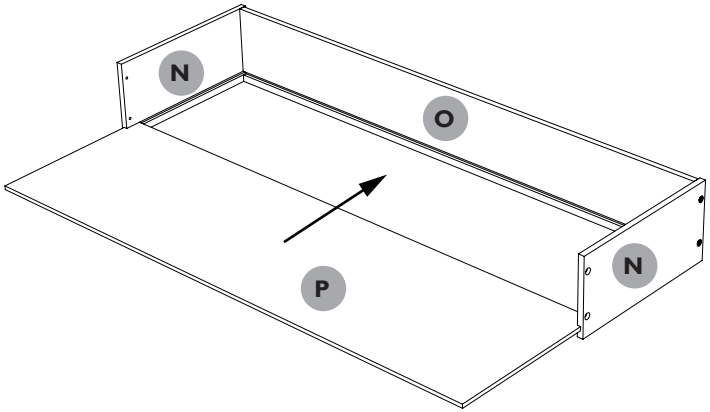

STEP 14:

Position the drawer front panel M ensuring it is tight to the drawer sides and the drawer base is in the groove, then attach using 4x medium size screws (#5).

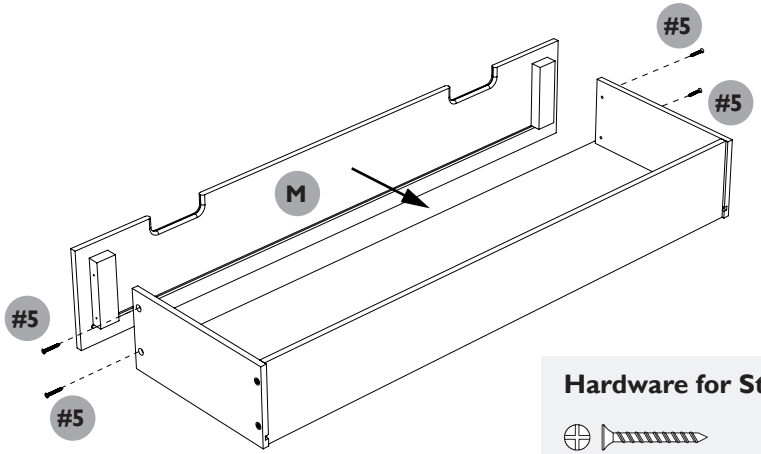

Hardware for Step 14:

4x #5 25mmL Screws

STEP 15:

Fit the two L shaped drawer runners to the two drawer sides with 4x shortest screws (#4) ensuring the nylon rollers are to the back of the drawer.

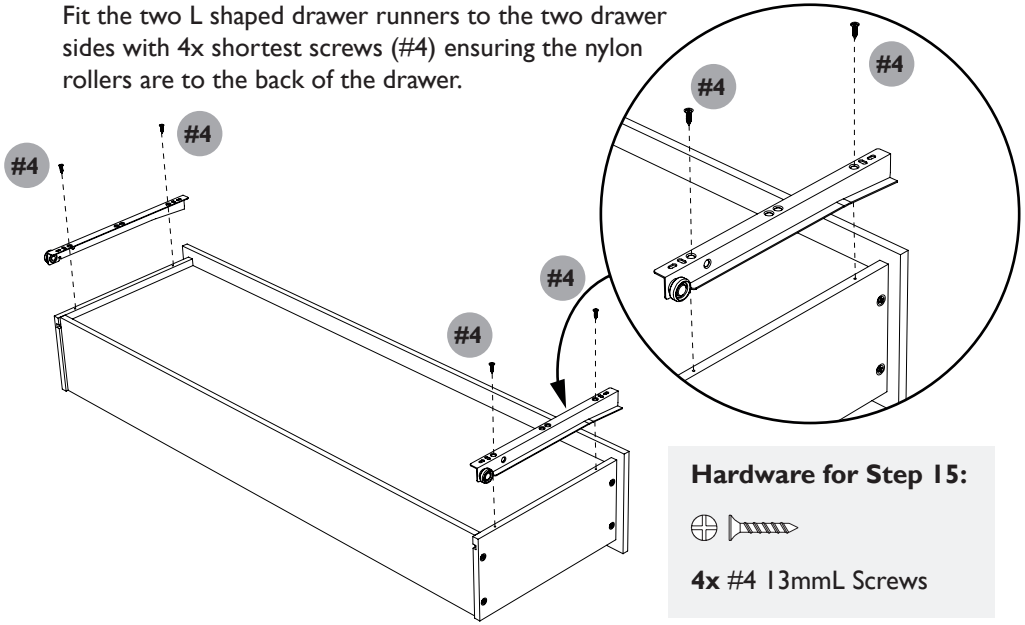

Hardware for Step 15:

4x #4 13mmL Screws

STEP 16:

With the assistance of a second person, stand the shop and theatre on the castors.

Slide in the drawer.

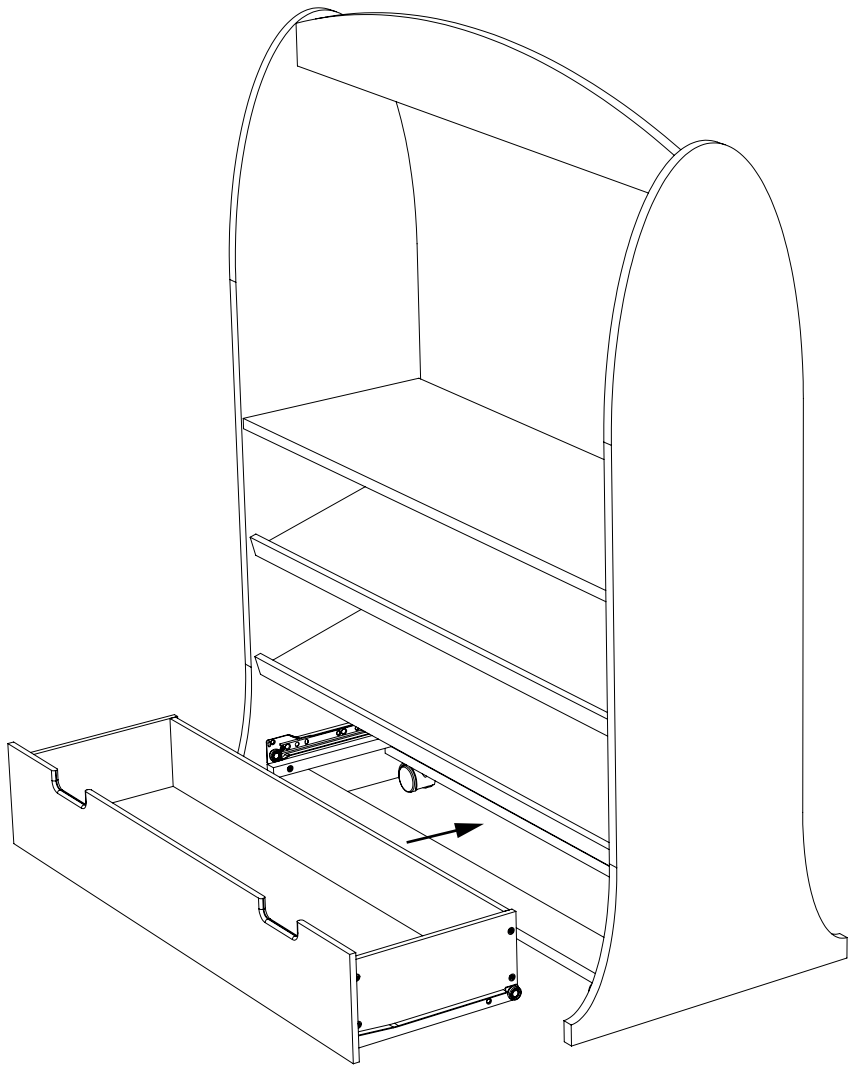

STEP 17:

Take the curtain pole L and slide the two curtains (#11) and the pole cradle covers (#7) onto the curtain pole ensuring the wider side of the pole cradle covers face outwards.

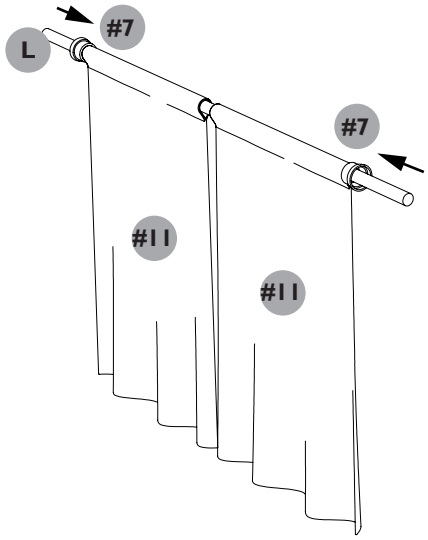

Hardware for Step 17:

2x #7 Pole Cradle Covers

STEP 18:

Lower the curtain pole onto the two pole cradles.

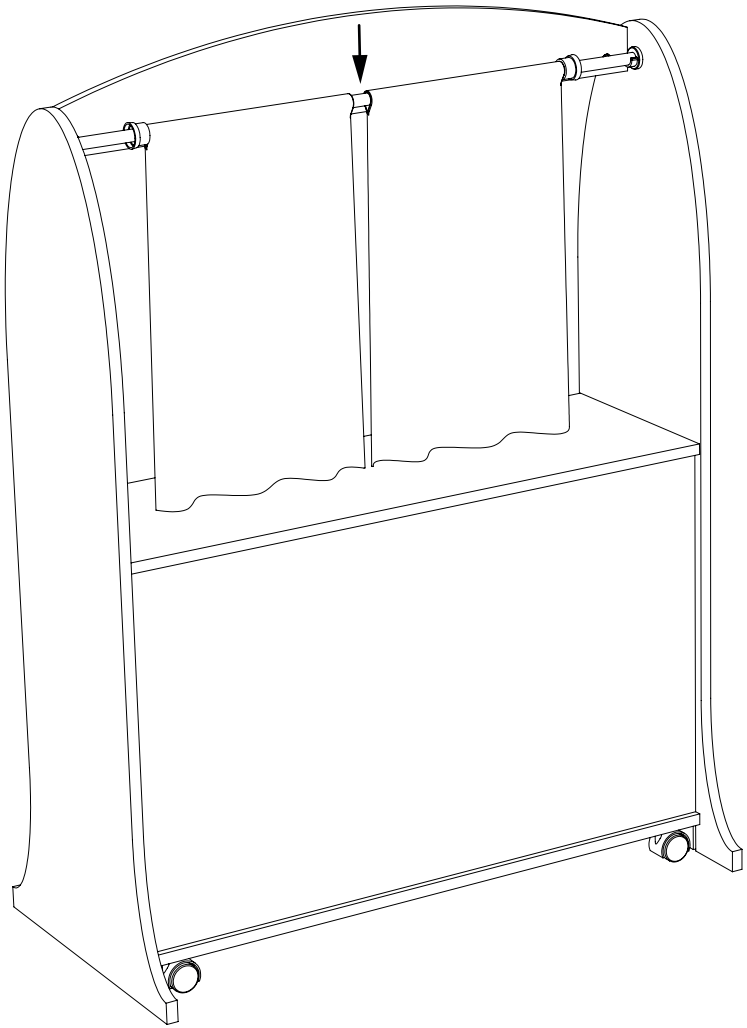

STEP 19:

Slide the pole cradle covers onto the pole cradles and move the curtains into place and secure with the curtain ties.

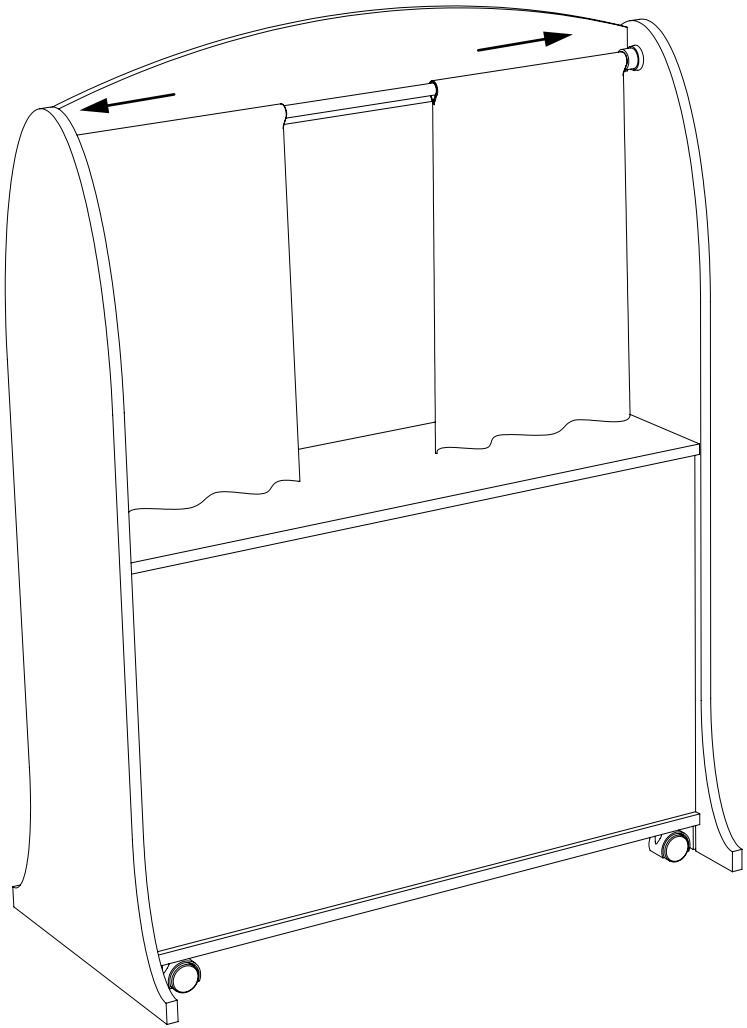

Your shop & Theatre is now ready to use.

Copyright© 2016 G.L.T.C. Ltd. All rights reserved.
Great Little Trading Company and GLTC are registered trade marks of G.L.T.C. Limited.